ELECTRICAL SPECIFICATIONS:

1.) FREQUENCY RANGE (MHz):	10-3500	3500-4000
2.) IMPEDANCE:	50 OHMS	
3.) INSERTION LOSS (MAX):	0.30 dB	0.35 dB
4.) VSWR (MAX):	1.20 : 1	
5.) DC VOLTAGE (MAX):	100 V	
6.) DC CURRENT (MAX):	1.5 A	
7.) RF-DC ISOLATION (MIN):	40 dB	
8.) RF INPUT POWER (MAX):	100W	

MECHANICAL SPECIFICATIONS:

1.) CONNECTORS:	SMA FEMALE (JACK), 50 OHM
2.) CONNECTOR BODY:	BRASS, TRI-ALLOY PLATE
3.) CONNECTOR PIN:	BERYLLIUM COPPER, GOLD PLATE
4.) INSULATOR:	PTFE, VIRGIN ELECTRICAL GRADE
5.) HOUSING:	ALUMINUM, CLEAR CHEM CONVERSION FILM, RoHS COMPLIANT (NO HEX CHROM)
6.) SOLDER:	LEAD FREE, RoHS COMPLIANT
7.) OPERATING TEMP:	-65°C TO +85°C
8.) WEIGHT:	133 GRAMS

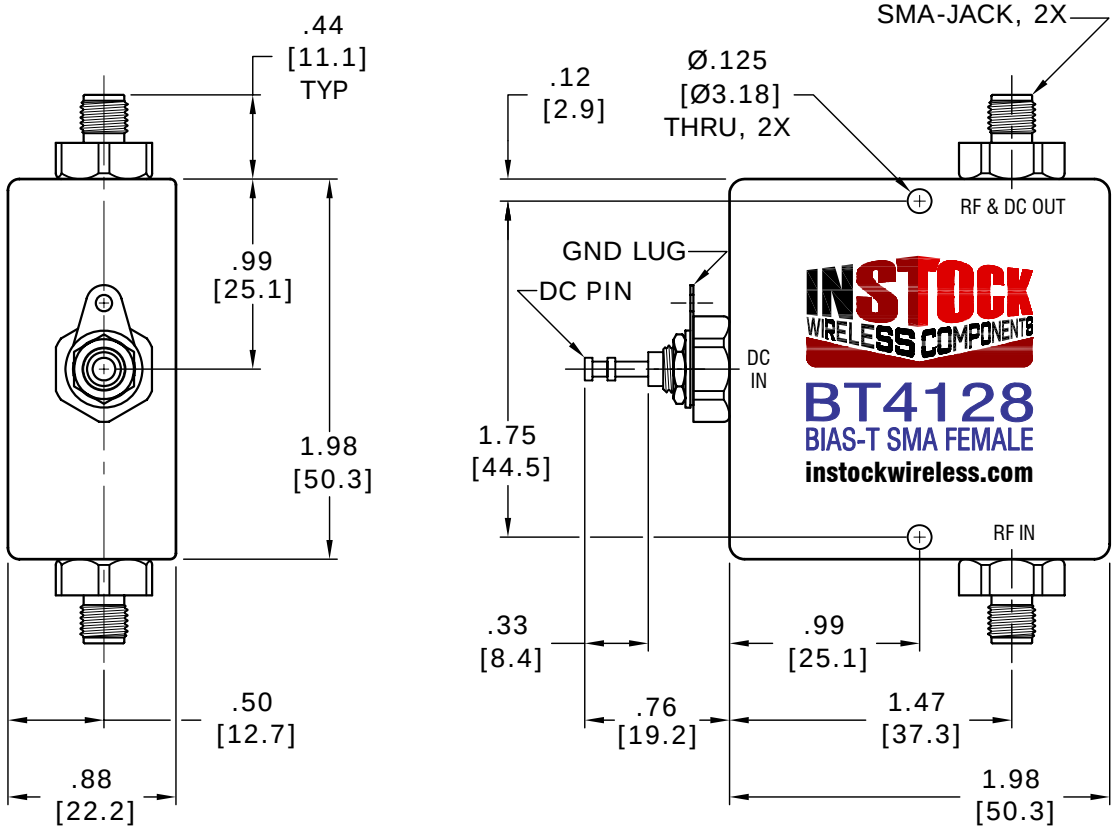

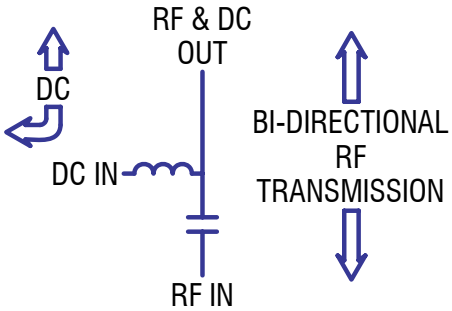

Bias-Tee, SMA Jack RF connectors, DC pin contact with ground lug; typically used for injecting DC current into or extracting DC current from RF transmission line.

REV	DESCRIPTION	BY	DATE

TOLERANCES	
INCHES	MILLIMETERS
.00 = ±.01	.0 = ±.25
.000 = ±.004	.00 = ±.10
DRAWN: TRD	APPROVED: MJD
DATE: 5/11/20	DATE: 5/11/20

instockwireless.com

MODEL NO. BT4128

TITLE BIAS-TEE, SMA JACK RF CONNECTORS, DC PIN CONTACT WITH GROUND LUG, 10-4000MHz, 100VDC, 1.5A, 50Ω, RoHS